HYPRO

Series 9000 and 9400 Series Belt and Gear-Driven Centrifugal Pumps

Form L-0310C
12/10

Installation, Operation, Repair and Parts Manual

Description

Hypro Centrifugal Pumps handle big, high-capacity farm spraying jobs with ease. Use them for spraying liquid fertilizers and other chemicals, including wettable powder slurries for weed control. Make short work of other farm jobs - filling nurse tanks, watering seed beds, and transferring liquids.

Available in a variety of models, Hypro centrifugal pumps give you the choice of economical simple belt drive, or sturdy, smooth running oil-bath gear-driven units. Many models are also available in lightweight polypropylene (pump portion only) for resistance to corrosive liquids such as acid-based fertilizers.

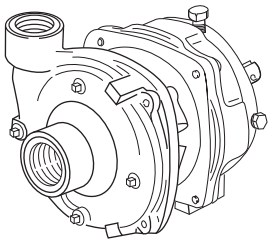

SERIES 9000C-O

Cast Iron, Gear-Driven Centrifugal Pump

Max. Flow Rate: .....118 gpm
Max. Pressure: .....80 psi
Max. Speed: ....600 or 1000 rpm
Ports: .....1-1/2" NPT inlet
1-1/4" NPT outlet

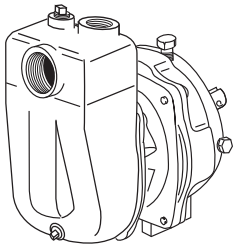

SERIES 9000C-O-SP

Cast Iron, Gear-Driven, Self-Priming Centrifugal Pump

Max. Flow Rate: ....117-119 gpm
Max. Pressure:.....68-77 psi
Max. Speed: ....600 or 1000 rpm
Ports: ..... 1-1/2" NPT inlet
1-1/4" NPT outlet

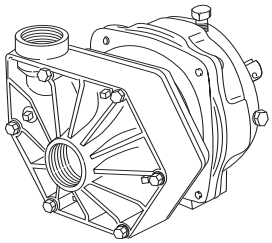

SERIES 9000P-O

Polypropylene, Gear-Driven Centrifugal Pump

Max. Flow Rate: .....93 gpm
Max. Pressure: .....80 psi
Max. Speed: ....600 or 1000 rpm
Ports: .....1-1/2" NPT inlet
1-1/4" NPT outlet

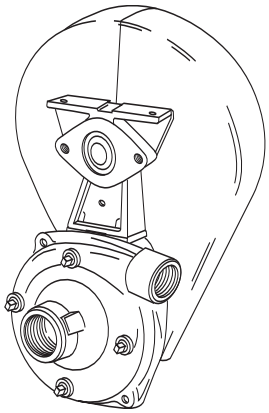

SERIES 9402C, 9403C

Cast Iron & 9403S

Stainless Steel, Belt-Driven Centrifugal Pump

Max. Flow Rate: ....84-140 gpm
Max. Pressure:.....95-104 psi
Max. Speed: ....600 or 1000 rpm
Ports: 1-1/4" or 1-1/2" NPT inlet
1" or 1-1/4" NPT outlet

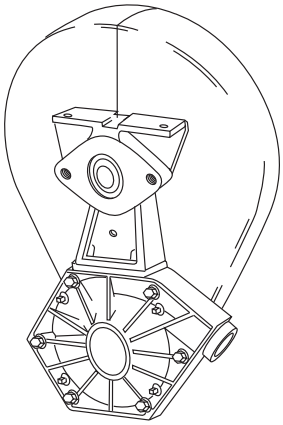

SERIES 9403P

Polypropylene, Belt-Driven Centrifugal Pump

Max. Flow Rate: .....86 gpm
Max. Pressure: .....82 psi
Max. Speed: ....600 or 1000 rpm
Ports: .....1-1/2" NPT inlet
1-1/4" NPT outlet

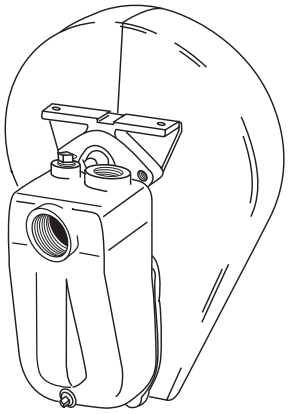

SERIES 9403C-SP

Cast Iron, Belt-Driven, Self-Priming Centrifugal Pump

Max. Flow Rate: .....112 gpm
Max. Pressure: .....100 psi
Max. Speed: ....600 or 1000 rpm
Ports: ..... 1-1/2" NPT inlet
1-1/4" NPT outlet

General Safety Information

NOTE

Notes are used to notify of installation, operation, or maintenance information that is important but not safety related.

⚠CAUTION

Caution is used to indicate the presence of a hazard, which will or may cause minor injury or property damage if the notice is ignored.

⚠WARNING

Warning denotes that a potential hazard exists and indicates procedures that must be followed exactly to either eliminate or reduce the hazard, and to avoid serious personal injury, or prevent future safety problems with the product.

⚠DANGER

Danger is used to indicate the presence of a hazard that will result in severe personal injury, death, or property damage if the notice is ignored.

⚠DANGER

Do not pump flammable or explosive fluids such as gasoline, fuel oil, kerosene, etc. Do not use in explosive atmospheres. Components not rated for use with Anhydrous Ammonia. The pump should only be used with liquids compatible with the pump materials. Failure to follow this notice may result in severe personal injury and/or property damage and will void the product warranty.

⚠WARNING

The sound pressure level of the pump may exceed 80dBA. Observe all safety precautions when operating the pump within close proximity for extended periods by wearing hearing protectors. Extended exposure to elevated sound levels will result in permanent loss of hearing acuteness, tinnitus, tiredness, stress, and other effects such as loss of balance and awareness.

⚠CAUTION

- **Do not pump at pressures higher than the maximum recommended pressure.**
- **Operate the pump between a temperature range of 45° to 140° F [7° to 60° C].**
- **Make certain that the power source conforms to the requirements of your equipment.**
- **Provide adequate protection in guarding around the moving parts such as shafts and pulleys.**
- **Disconnect the power before servicing.**
- **Release all pressure within the system before servicing any component.**
- **Drain all liquids from the system before servicing.**
- **Secure the discharge line before starting the pump. An unsecured discharge line may whip, resulting in personal injury and/or property damage.**
- **Check all hoses for weak or worn condition before each use. Make certain that all connections are tight and secure.**
- **Periodically inspect the pump and the system components. Perform routine maintenance as required (See Maintenance).**
- **Use only pipe, hose, and hose fittings rated for maximum rated pressure of the pump or the pressure at which the pressure relief valve is set at. Do not use used pipe.**
- **Do not use these pumps for pumping water or other liquids for human or animal consumption.**

Hazardous Substance Alert

1. Always drain and flush pump before servicing or disassembling for any reason (see instructions).
2. Always drain and flush pump prior to returning unit for repair.
3. Never store pumps containing hazardous chemicals.
4. Before returning pump for service/repair, drain out all liquids and flush unit with neutralizing liquid. Then, drain the pump. Attach tag or include written notice certifying that this has been done.

NOTE

It is illegal to ship or transport any hazardous chemicals without United States Environmental Protection Agency Licensing.

Drive Source Installation

This manual will cover the installation of the basic drive configurations available for belt and gear-drive Hypro Centrifugal Pumps. Consult the manufacturer of your tractor, motor or engine for additional information. Read all instructions and general safety information before attempting to install or operate the pump.

Tractor PTO Installation

Series 9400 Belt-Drive Centrifugal Pumps

Series 9400 Pumps are designed for ease of installation and removal with tractor-mounted sprayers. Hollow shaft models come equipped with Hypro's unique locking collar, designed to hold the pump driver hub more securely on the PTO shaft. Refer to following section for proper installation of the locking collar. Pump life is increased by reducing both pump driver hub and PTO shaft wear due to vibration.

To prevent pump from turning on PTO shaft, install a torque chain as follows:

1. Remove one Pump Casing Outboard Bolt (farthest away from the PTO shaft). Using a 1/4" longer Bolt and two Flat Washers, attach a length of chain or other flexible fastener to the bolt between the washers (See Figure 1) and insert them into the Pump Casing in place of the bolt removed. Secure the other end of the torque chain to something solid on the tractor, preferably above the pump rather than below. If it cannot be attached to anything above the pump, it may be fastened to the draw bar or frame directly below the pump.

2. The Torque Chain must be in a straight upward or downward line from the pump, as any sideways pull may damage the Pump Bearings. The Torque Chain should have some slack in it to allow the pump to "float" on the PTO shaft during operation.

3. To prevent start-up shock, a Spring should be attached to the Torque Chain. Secure end of the Spring to something solid in the same manner as using a Torque Chain alone.

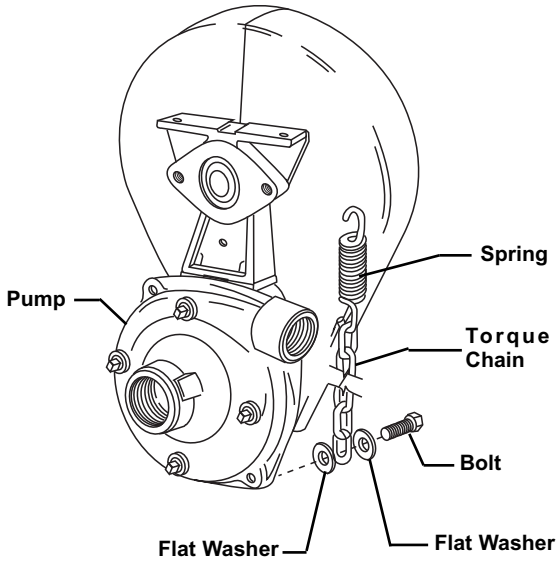

Figure 1
Torque Chain Installation

Locking Collar Kit No. 3430-0190 - for Model 9028C and 9400 Series 1000 rpm (1-3/4").

Locking Collar Kit No. 3435-0058 - for Models 9006C, 9006P, 9008C, and 9008P Pumps.

Locking Collar Kit No. 3430-0207 - for 9400 Series belt drives with 6 and 21-spline hollow shafts (1-3/8").

This locking collar kit holds the pump driver shaft securely on the tractor PTO shaft. It is designed to increase pump life by reducing pump and PTO shaft wear due to vibration. To install locking collar:

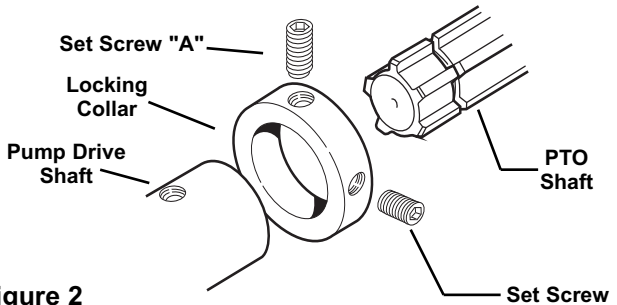

Figure 2
Locking Collar Installation

1. Slide Locking Collar onto Pump Driver Shaft.
2. Thread the longer Set Screw "**A**" through the Locking Collar and partially through the threaded hole in the Pump Driver Shaft.

NOTE

It is necessary to allow a minimum of 1/8" clearance between the Locking Collar and the Pump Driver Shaft at Set Screw "A" (See Figure 2).

3. Thread the shorter set screw "**B**" into the other threaded hole in the Locking Collar.
4. Slide Pump Driver Hub over PTO Shaft. Be sure PTO groove is under Set Screw "**A**".
5. Tighten Set Screw "**A**" very securely with a 3/16" allen wrench.
6. Tighten Set Screw "**B**" very securely with the same wrench. This binds Set Screw "**A**" which prevents it from coming loose.

NOTE

The Locking Collar is off-center on the Pump Driver Shaft when properly installed.

Tumble Rod Drive (Belt-Drive Pump)

Two mounting holes are predrilled and tapped on the adjustment arm of unit for attachment to sprayer frame. Use lockwashers to assure secure mounting. Tumble rod can be connected directly to driver shaft or with an adapter.

⚠ CAUTION

Exercise caution to ensure:
1. **The tumble rod is level.**
2. **The hitch pin is equal distance between the end of the tractor PTO shaft and the end of the pump shaft.**
3. **Turn angles of greater than 45° are avoided.**

Failure to follow these three rules will cause damage to the pump drive line.

Tumble Rod Mounting

The best Tumble Rod installation occurs when the distance from the PTO U-joint to the hitch is equal to the distance from the hitch to the pump U-joint. For 540 rpm PTO shafts, the distance from the hitch pin to the pump shaft should be 14 inches. For 1000 rpm 1-3/8" PTO shafts, the distance is 16 inches. For 1000 rpm 1-3/4" PTO shafts, the distance is 20 inches.

If direct PTO mounting is not convenient or desired, then mount the pump in a convenient position on the pull-behind sprayer and connect it to the tractor PTO with a "Tumble Rod" Power Shaft.

NOTE

Exercise caution when using this approach to ensure:
1. **The tumble rod is level.**
2. **The hitch pin is the center-point.**
3. **Turn angles greater than 45° can be avoided.**

Failure to follow these three points may cause "power shocks" within the pump and drive units and increase wear on seals and gears.

Power shocks occur when the PTO shaft knuckle and the universal joint at the pump end of the tumble rod turn faster on the inside of the turning angle than on the outside. To prevent these vibrations, the angle of the tumble rod to the tractor PTO shaft and the angle of the tumble rod at the pump shaft should be as close to equal as possible. This will cancel out the fluctuations.

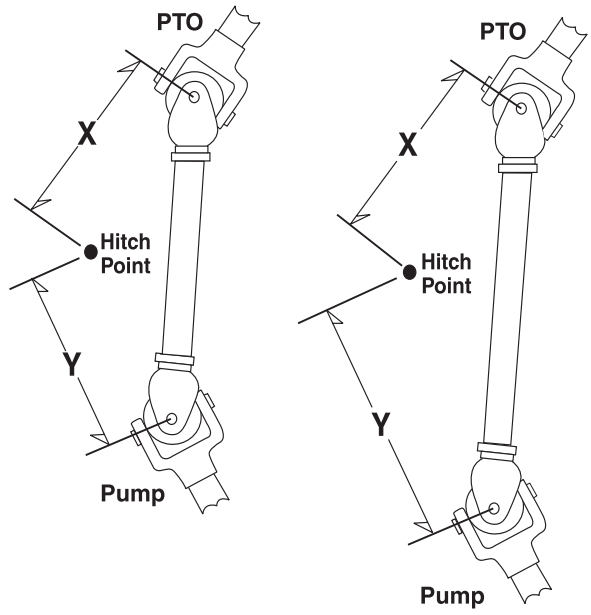

Correct Equidistant Tumble Rod Installation
X and Y are equal, which maintains equal u-joint angles and prevents fluctuations.

Incorrect Tumble Rod Installation
X and Y are not equal, creating unequal u-joint angles which may result in rpm fluctuations and increased wear on the u-joints and pump.

Figure 3
Tumble Rod Mounting

Belt Drive and Safety Shield Assembly (See Figure 4)

1. Insert the Bracket (1520-0062) into the center mounting slot on one of the half shields.

2. Hold this half shield over the belt and corresponding pulleys while sliding the other half shield into place.

3. Insert the Carriage Bolts (2240-0017) through the two shields with the square carriage heads seating in the square holes and tighten the Wing Nuts (2252-0002).

4. Insert the Attachment Bolt (2210-0021) through the pedestal of the belt drive, into the threaded Bracket (1520-0062) and tighten.

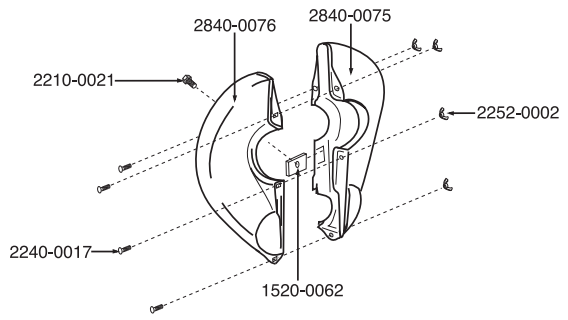

Figure 4
Belt Drive and Safety Shield Assembly

Series 9000C PTO Gear Driven Pumps

On Series 9000C units, install the pump using the Hypro PTO Mounting Clip, which is designed to accommodate most tractor PTO shields. When properly installed, the Mounting Clip prevents the pump from rotating, reduces the weight on the Pump Shaft (reducing excessive wear on the bearings), and in most cases, replaces the torque chain. It also covers the rotating PTO and Pump Shaft as an added safety precaution when pump is in operation.

1. When mounting the Mounting Clip to the PTO shield, make sure the shield is not bent down. This will cause an additional burden on the Pump Bearings. It may be necessary to bend the shield back to its original position (or higher) to allow the Mounting Clip to slide under the shield as shown in Figure 5.
2. Attach the Mounting Clip to the pump by using the bolts in the Pump Housing. Do not tighten the bolts at this time. First align the pump on the PTO shaft to make the proper height and depth adjustments.
3. When the Mounting clip is firmly located on the PTO shield, tighten the bolts on the Pump Housing.

NOTE

It will be necessary to drill a 5/16" center hole in all flat surface shields to properly secure the Mounting Clip to the PTO shield (See Figure 5).

If the Mounting Clip cannot be used, the pump should be prevented from rotating on PTO shaft while in operation by attaching a Torque Arm to the Pump Base and tying it to the tractor with a chain (See Figure 6). Fasten the chain to the tractor directly below the Pump Gear Case or as close to vertical as possible to avoid backward or forward pull on the pump.

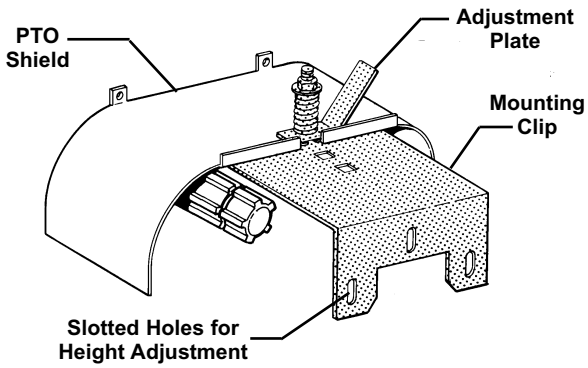

Figure 5
Mounting Clip Installation

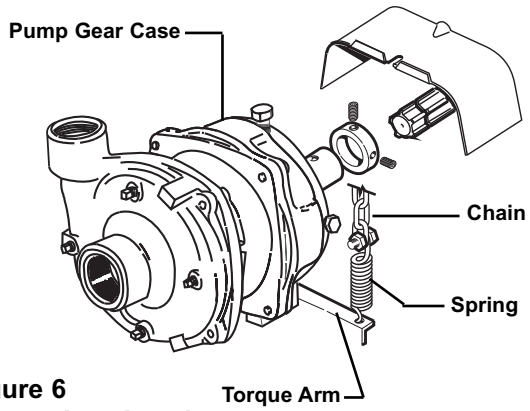

Figure 6
Torque Arm Attachment

Tumble Rod Drive (Gearbox Pumps) (See Figure 7)

Four mounting holes are drilled and tapped into the back of the pump gear case cover for attachment to sprayer frame. Use lockwashers to assure secure mounting. Tumble rod can be connected directly to driver shaft or with an adapter.

NOTE

Exercise caution when using this approach to ensure:
(1) The tumble rod is level.
(2) The hitch pin is the center-point.
(3) Turn angles greater than 45° can be avoided.
Failure to follow these three points may cause "power shocks" within the pump and drive units and increase wear on seals and gears.

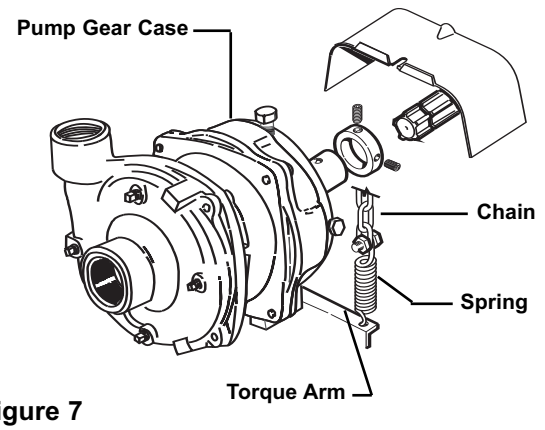

Figure 7
Tumble Rod Drive (Gearbox Pumps)

Lubrication

The pump gear case is lubricated at the factory. Re-lubricate after 250 hours of operation or at the start of each season. Also lubricate whenever gear case is opened for repair. To lubricate, fill gearcase with 6 oz. of Phillube SAE 80W90 or equivalent. Do not overfill.

Make sure the breather plug is installed in the top drain port in gear case.

The mechanical seal in the pump is lubricated by liquid being pumped. Do not run the pump dry. Pump bearings are factory lubricated and do not require further lubrication in the field.

Plumbing Installation

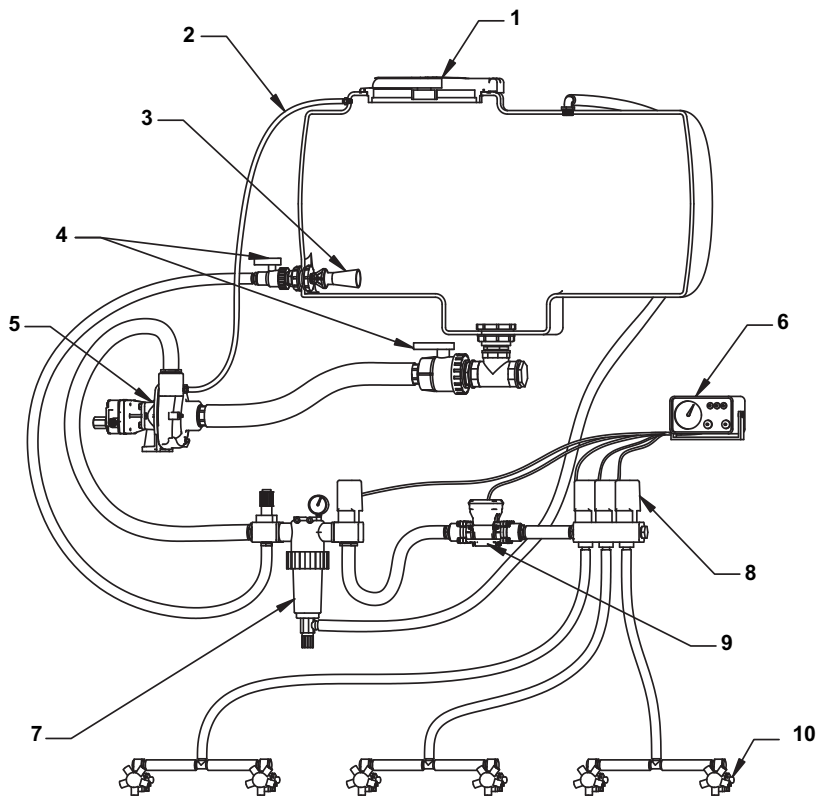

Centrifugal Plumbing Hook-up

REF. NO.	DESCRIPTION
1	Tank Lid
2	Vent Line #3430-0456
3	Jet Agitator
4	Shut-off Ball Valves
5	Centrifugal Pump
6	Spray Control Console
7	Centrifugal Pump Control
8	Manifold Boom Valve
9	Electromagnetic Flowmeter
10	Compact Jet Turret Nozzle Body

Plumbing Installation

Pump Installation:
The following are recommendations to achieve the optimal performance out of your centrifugal pump and your spraying system.

Pump Inlet Line
To achieve full capacity from the pump, the inlet line should be at least the same size as the inlet port on the pump. Reducing this line size will restrict the capabilities of the pump. The line must also be free of air leaks. Check all fittings and connections in the suction line for tightness. The introduction of air may affect the priming and pumping capabilities of the pump. Use good quality suction hose that will not be collapsed by suction.

For non-Self-Priming models, the centrifugal pump should be mounted below the liquid level and as near to the liquid source as possible to allow for the shortest suction line practical. To achieve optimal performance, the suction line should slope down into the pump. Avoid rises and humps that could trap air in the line to the pump. The suction line and pump should be filled with liquid prior to starting the pump, and all discharge lines should be open.

Priming:

IMPORTANT: PUMP MUST NOT BE RUN DRY.

In addition to the proper suction plumbing, a vent line should be installed to assist in priming. Use a Hypro Vent Line Kit 3430-0456. The vent line will help to prevent air locks and allows air to bleed off to the tank. This helps ensure proper priming and helps to prevent dry-run damage to the mechanical seal during priming. The vent line should be installed in the top port of the pump casing and the line routed sloping upward to the tank, where it should be mounted above the liquid line.

Pump Outlet Line
The recommended orientation for the outlet port is pointing straight up. This allows liquid to stay in the pump while it is priming. The outlet line should be the same size as the pressure port on the pump to give the optimal flow. The line should have as few restrictions and elbows as possible to optimize the pump performance and reduce pressure drop from the pump to the spray tips.

Centrifugal Pump Control
Hypro now offers many different components for spraying systems. The Hypro centrifugal pump control incorporates the electric flow control valve, a self-cleaning line strainer, a visual pressure gauge and a manual agitation control valve.

Flow Control Valve
A high-flow electric proportional valve allows for maximum flow control to the boom valves. It provides smooth, rapid control that can be controlled from either an electronic rate controller or switch box.

Strainers
The recommended placement of the strainer for a centrifugal pump is in the pump outlet line. This will eliminate any possible restriction that the strainer could create if it were installed in the inlet line. Ensure that the proper strainer size and screen mesh are used to limit the pressure drop and achieve the best filtration. Line strainers can also be installed in the tank fill line to filter liquid as it is loaded into the tank as well as in the boom lines to further filter the solution prior to the spray tips. Tank baskets can also be used to filter material added through the tank lid.

Agitation
The centrifugal pump control contains a manual agitation control valve that can be adjusted to provide the right amount of flow to the jet agitators in the tank to ensure proper mixing within the tank.

Flowmeter
To eliminate the mechanical problems of a turbine flowmeter, we recommend that an electromagnetic flowmeter be used. These flowmeters have no moving parts to wear out and will provide a more consistent and accurate flow reading. They can be input into just about any electronic rate controller or switch box.

Boom Section Valves
For rapid response and reliability, we recommend electric plunger valves be used for boom control. The valves should be sized accordingly to minimize the pressure drop and maximize the flow rate. The boom tubing or hose should be sized accordingly to ensure that a pressure drop in the lines does not occur, causing inconsistent pressures at the nozzles.

Nozzle Bodies
Nozzle bodies with shut-off check valves are recommended to eliminate dripping from the spray tips when the boom valves are shut down.

For further information regarding Hypro products, contact your local dealer or Hypro directly at www.hypropumps.com or by calling 1-800-424-9776.

⚠ CAUTION

Engage the PTO clutch slowly and smoothly. Avoid sudden starts and fast clutching that may damage the drive section of the pump.

Controlling the Flow

Two Flow Control Valves are used - one in the agitation line and one in the line leading to the boom or spray gun. This permits controlling agitation flow independently of nozzle flow.

To Adjust For Spraying

To adjust the sprayer (regardless of power source - PTO, belt or pulley), follow these steps:

1. Prime the pump with all valves open.
2. Close Control Valve and Agitation Line Valve; then open the Boom Shut–Off Valve.
3. With the pump running, open the Control Valve until the Pressure Gauge indicates desired spraying pressure.
4. Open the the Agitation Line Valve until sufficient agitation is observed. Then, if spraying pressure drops, readjust the Control Valve to restore desired pressure.
5. Make sure flow is uniform from all nozzles.

After spraying adjustments are made, it is only necessary to close the Boom Shut-Off Valve to discontinue spraying.

On belt drive models, check belt tension daily or before each use.

Flush Pump After Use

One of the most common causes for faulty pump performance is “gumming” or corrosion inside the pump. Flush the pump and entire system with a solution that will chemically neutralize the liquid pumped. Mix according to manufacturer’s directions. This will dissolve most residue remaining in the pump, leaving the inside of the pump clean for the next use.

To Prevent Corrosion

After cleaning the pump as directed above, flush it with a permanent-type automobile antifreeze (Prestone, Zerex, etc.) containing a rust inhibitor. Use a 50/50 solution of antifreeze and water. Plug the ports to keep out air during storage. For short periods of idleness, non-corrosive liquids may be left in the pump, but air must be kept out. Plug the ports or seal port connections.

⚠ CAUTION

Always flush the pump with water or neutralizing agent before servicing.

Pump Housing Disassembly

NOTE

In most cases, seal replacement requires disassembly of only the pump half of the unit.

NOTE

Instructions following in italics describe procedures for the Polypropylene Centrifugal Pumps, when different than the Cast Iron Pumps.

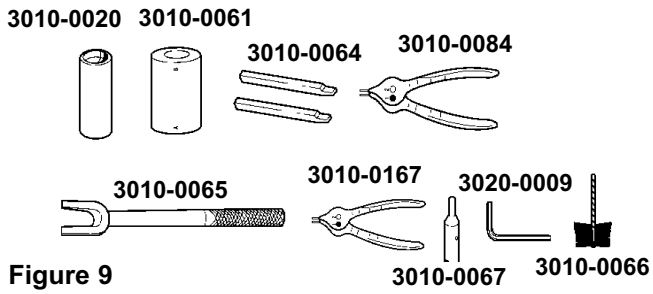

Figure 9
Recommended Repair Tools

NOTE

On Models 9402C, 9403C, 9403C-S, and 9403P, remove the Belt Shields and Belt, then remove the Pedestal Bracket and Driver Pulley (See Figure 10).

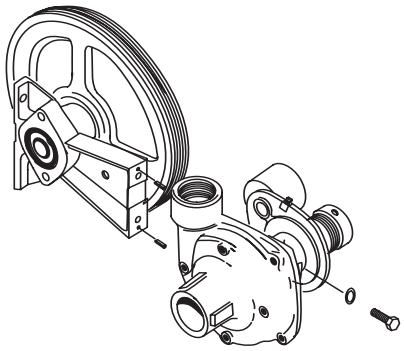

Figure 10
Removing the Pedestal Bracket and Driver Pulley

1. Remove the four Casing Cap Screws with a 9/16" box end wrench. Tap the Pump Casing discharge port with rubber hammer, if necessary, to break it loose from the Mounting Flange. Check inside of Pump Casing including the suction port. If it is badly eroded or damaged, the Pump Casing should be replaced. Remove and discard the O-ring. The O-ring should always be replaced. [*Using a 1/2" wrench, remove the six bolts from the front. Also remove the 5/16" screw from the rear, near the outlet port.*]

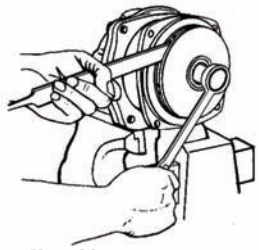

Figure 11
Removing the Impeller Nut

2. To remove the Impeller Nut, clamp the Flange in a vise and insert a large screwdriver or file (at least 10" long) into the Impeller Vanes to prevent the Impeller from turning when loosening the Impeller Nut. Use a socket wrench (3/4" for Series 9000C or 5/8" for Series 9200C and 9400C) to remove the Impeller Nut by turning it counterclockwise (See Figure 11). [*Use 7/8" deep socket wrench to remove plastic seal nut, then 9/16" deep socket to remove metal jam nut, rubber gasket and washer.*]

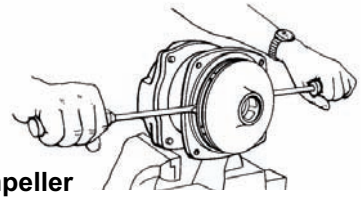

Figure 12
Removing the Impeller

3. Once the nut [*and washer*] is removed, place a screwdriver on each side (See Figure 12) behind the impeller and pry away from the mounting flange. (Remove Woodruff Key from the shaft for Series 9000 only). Remove o-ring from the mounting flange.

Pump Seal Removal

1. Lightly lubricate the shaft for easier removal of the seal. Using two screwdrivers positioned opposite each other, pry the rotary portion of the seal from the shaft (See Figure 13).

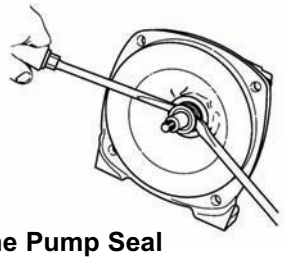

Figure 13
Removing the Pump Seal

2. [*Remove plastic back cover flange. Knock seal out from back with a hammer and screwdriver.]*
3. Remove stationary seat and boot by prying out with two small screwdrivers in manner similar to impeller removal.

NOTE

The seal will be damaged by removal in this manner. A new seal and rubber gasket must be used when the pump is reassembled.

Clean-Up Of Pump Housing

1. Using the circular bottle-type wire brush with an air or hand drill, clean the discharge port, suction port and the sealing areas of the o-ring on the pump casing and mounting flange. [*This step should not be performed on the Polypropylene models.*]
2. After wire-brush cleaning, it is recommended that the pump casing and mounting flange be further cleaned in a solvent tank to remove rust and corrosion particles.

Pump Shaft and Bearing Assembly Removal and Replacement

NOTE

The pump must be separated from the gear case or belt drive prior to removal of the pump shaft and bearing.

Series 9000C-O, 9000C-O-S & 9000P-O

1. Remove the drain plug from the bottom of the gear case, and drain the waste oil into an appropriate container.
2. Remove the cap screws securing the gear case to the pump; then separate the pump from the gear case.
3. Remove the cap screws securing the mounting flange to the pump; then separate the mounting flange from the pump.

Series 9402C, 9403C, 9403 & 9403C-SP

1. Remove the set screw securing the driven pulley to the pump shaft; then slide the driven pulley and key off the pump shaft (See Figure 14).

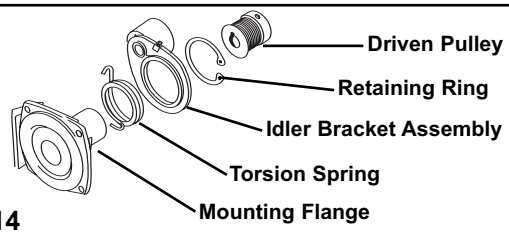

Figure 14

⚠ WARNING

Special attention should be exercised when working with retaining rings. Always wear safety goggles when working with spring or tension-loaded fasteners or devices.

2. Remove the retaining ring securing the idler bracket assembly to the mounting flange (See Figure 14).
3. Slide the idler bracket assembly and torsion spring off the mounting flange (See Figure 14).

Series 9000C-O, 9000C-O-SP, 9000P-O, 9402C, 9403C, 9403 & 9403C-SP

1. Remove the internal retaining ring from the mounting flange.
2. Place the mounting flange on an arbor press with the shaft end facing up: then press the shaft and both bearings out of the mounting flange (See Figure 15).

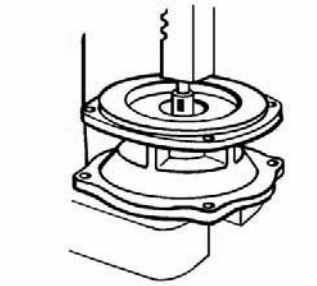

Figure 15
Pressing Shaft and Bearings out of Mounting Flange

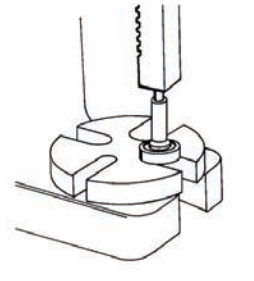

Figure 16
Pressing Bearings off Shaft

3. Using an arbor press, press the old bearings off the shaft (See Fig. 16). Because the center portion of the shaft has a thicker diameter than the ends, the bearings must be pressed off each end of the shaft.

4. Support the inner races of the new bearings; then press the shaft into the new bearings.

5. Pressing on the outer race of the new bearings, press the new bearings into the mounting flange.

6. Install the internal retaining ring.

Seal Replacement/Pump Housing Reassembly

NOTE

Be extremely careful with the new seal. Take special care not to scratch the lapped sealing faces of the rotary washer and stationary seat.

1. Lubricate seal cavity in the mounting flange with WD-40, LPS or equivalent.

2. Install the stationary portion of the mechanical seal by sliding it over the shaft with the ceramic side out.

NOTE

Make sure both seal cavity and seal are clean and lubricated. Never run the sealing faces dry.

3. To seat the seal in the seal cavity, use a piece of 3/4" PVC pipe 4" to 6" in length. Press it in firmly and squarely. Lubricate sealing surface on seal after it is seated.

4. To install the rotary portion of the mechanical seal, place it over the shaft with the carbon side facing in, and press until it bottoms out against the stationary portion of the mechanical seal (See Fig. 17).

5. Insert the key into shaft key slot. Place the Impeller on the shaft. Put the *[Washer, Jam Nut and Gasket]* impeller nut on the shaft, and using a large screw-driver or file inserted into the impeller vanes for support, tighten impeller nut securely.

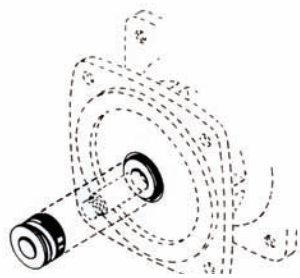

Figure 17
Mechanical Seal Installation

6. Install the O-ring on the mounting flange. Replace O-ring if it is worn or damaged.

7. Place pump casing on the mounting flange, then insert and alternately and evenly tighten the bolts.

NOTE

If the Gear Drive does not require service, secure the Gear Drive to the Pump Mounting Flange using the Cap Screws removed in Step 3 of Pump Shaft and Bearing Assembly Removal and Replacement.

Disassembling Gear Drive Unit - Series 9000 Models

1. Remove the drain plug from the bottom of the gear case and drain the waste oil into a proper container.
2. Remove the four gear case capscrews with 9/16" socket wrench.
3. Remove mounting flange adapter from gear housing.
4. Remove retainer ring from mounting flange adapter with screwdriver. **NOTE:** On 1000 rpm models, Sun gear must first be removed with a wheel puller. Exposed retaining ring must also be removed.
5. Place mounting flange adapter in arbor press on Fixture 3010-0001 with shaft end up. Press out shaft and bearing assembly (See Figure 15).
6. Check bearing for wear or damage. It should turn smoothly and easily. DO NOT WASH BEARING.
7. If bearing needs replacement, remove bearing seal from shaft.

Special attention should be exercised when working with Retaining Rings. Always wear safety goggles when working with spring or tension-loaded fasteners or devices.

1. Remove crescent retainer ring from shaft with screwdriver.

NOTE

1000 rpm models have two of these rings.

2. Place assembly into slot of arbor press table, threaded end up (See Figure 16). Press out shaft.
3. Wash and examine teeth of shaft pinion gear or Sun gear for excessive wear or damage. Also make sure that sealing area of shaft is smooth, not worn or pitted. In most cases, the area can be polished smooth. In area where rubber driving ring contacts shaft, some roughness is required around shaft to prevent seal slippage. DO NOT LUBE.
4. Clamp gear casing in vise, gripping on the driver hub (See Figure 18). Remove driver gear capscrews using 3/4" box end wrench. Remove washers, front thrustwashers, driver gears, inner races and back thrust washers.
5. Wash and check parts. Examine teeth of driver gears for excessive wear or damage. Also check to see that the inner bearing race surfaces and nylon thrust washers are not worn or scored.
6. Remove cushion bumpers with needle nose pliers or a small screwdriver, then remove fixed internal gear by hooking fingers at bottom and pulling up (See Figure 19).

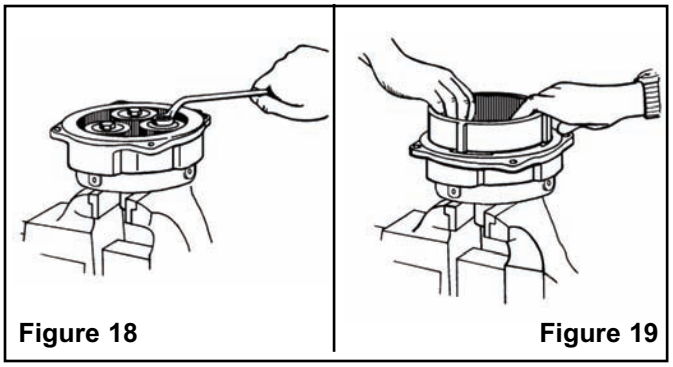

Figure 18 Figure 19

7. Wash and examine cushion bumpers and teeth of fixed ring for damage or excessive wear. Wear can be detected by sliding knife blade along edge of teeth, especially near outer edges of ring gear. If worn, replace.
8. With a flat blade screwdriver, pry the oil seal from the gear case. Removing in this manner will damage the seal and make it unsuitable for reuse.
9. Remove the main bearing retainer ring with pliers No. 3010-0084. Remove the slinger ring.
10. Place the remainder of the gear case assembly in the press, face down (See Figure 20). Press out the driver hub.
11. Turn the gear case over and remove the large retainer ring with a screwdriver.
12. Place the gear case back in the press face down and press out the main bearing (See Figure 21).
13. Check the main bearing for roughness or damage. It should turn smoothly and easily.

Gear Drive Unit Reassembly

NOTE

Before reassembling the gear drive unit, all parts should be examined, and parts being reused should be clean and free of old oil. DO NOT WASH MAIN BEARING.

1. Place the gear case in the press, face up. Press the main bearing in (See Figure 22). Insert a large retainer ring into the gear case.
2. Place the gear case in the press, face up. Position the driver hub in the main bearing and press in, bottoming on the main bearing.

NOTE

On the 1000 rpm models, perform Step 5 before installing the driver hub.

3. Install the main bearing retaining ring with pliers No. 3010-0084.

4. Slide a new oil seal over the driver hub and press into the gear case until flush.

5. Clamp the PTO end of the driver hub in a vise, as in Figure 18. Position the large fixed gear into the gear case, aligning lugs of gear into slots so that cushion bumpers insert. Replace if damaged.

6. Slip the washer, front thrustwasher, and inner bearing race onto the driver gear capscrew. Insert into needle bearing of driver gear. Apply a dab of grease to back thrustwasher to prevent it from falling off when assembling. Match the teeth of driver gear with the teeth of fixed gear and align the capscrew with the hole in driver hub. Screw in and tighten. Repeat steps to install the other two driver gears. Use Blue Loctite on the bolts. Replace the thrust-washers if they are worn or frayed.

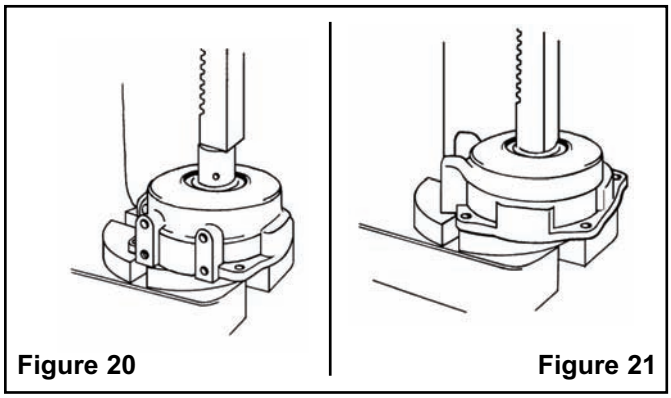

Figure 20 Figure 21

7. Insert the pump shaft into bearing and place in press with the bearing supported by Tool No. 3010-0061 (See Figure 23). For 540 rpm models, press down until the gear touches the bearing; for 1000 rpm models, press until it is between the snap ring grooves. Install the crescent retainer rings by starting in the groove and pressing on with flat of screwdriver (one ring on 540 rpm models, two rings on 1000 rpm models).

8. Slide the thin gasket and bearing seal onto the shaft.

9. Set the mounting flange adapter in the press with the bearing cavity up. Press the shaft and bearing assembly down to the bottom. Use Tool No. 3010-0061 to support the bearing (outer race). (See Figure 24.) Install the retainer ring with the screwdriver. On 1000 rpm models, insert woodruff key on Sun gear end of shaft and press the Sun gear into position, supporting shaft from the bottom. Secure with retaining ring.

10. Lightly grease and install the large o-ring into the groove of the mounting flange adapter.

11. Clamp the PTO end of the gear case unit in the vise (See Figure 25). Place the mounting flange adapter and the shaft assembly over the gear case unit, inserting the pinion gear of Sun gear end of shaft into the center point of the three driver gears, matching teeth. BE CAREFUL NOT TO DAMAGE THE TEETH OF THE GEARS.

NOTE

The weep holes in the mounting flange adapter must face down - towards feet. Do not force together.

12. Align holes and secure with gear case capscrews, using a 9/16" socket wrench.

13. Replace the bottom drain plug in the gear case and remove the top fill plug. Fill the gear case with approximately **6 oz.** of Phillube SAE 80W90 Gear Oil. DO NOT OVERFILL. Replace the breather plug. DO NOT use the side plugs on the gear case for a fill level indicator because doing so will cause you to overfill and damage the gear case.

14. Install the pump seal, impeller and pump casing as described elsewhere.

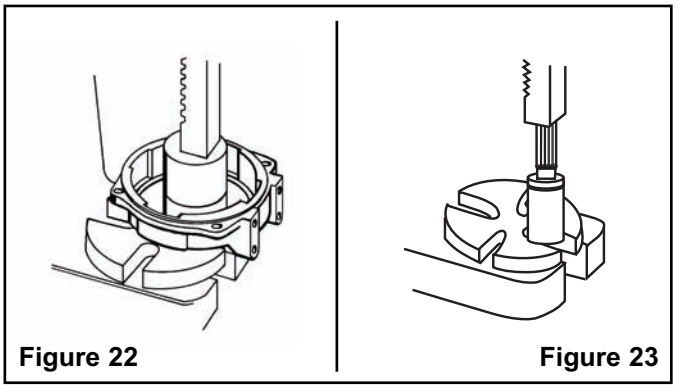

Figure 22 Figure 23

Belt Replacement (Series 9400 Models)

1. Remove the safety shield.
2. Insert a 15/16" socket onto idler arm bolt head and apply tension in a counterclockwise direction.
3. Slip the belt off of the large pulley.
4. Wrap the new belt around the small pulley and on the inside of the idler pulley.
5. Insert a 15/16" socket onto idler arm bolt head and apply tension in a counterclockwise direction.
6. Slip the belt around the large pulley, ensuring that the grooves on the pulleys match the grooves on the belt.

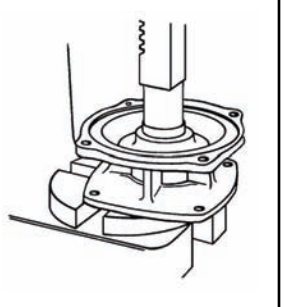

Figure 24

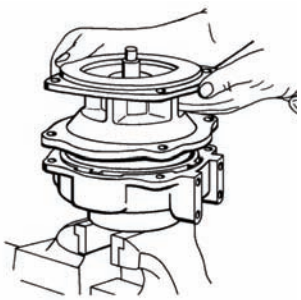

Figure 25

Belt Alignment and Tension

PERIODICALLY CHECK BELT FOR WEAR AND ALIGNMENT.

1. Remove the safety shield. Inspect the belt for wear and alignment. Proper alignment will reduce belt and pulley wear.
2. Refer to Figure 26 to align the belt. Place a straight edge on the outer edge of the large pulley. Measure the distance from the straight edge to the edge of the belt (Point A). This should be the same as the distance between the straight edge and the belt at the small pulley (Point B). Loosen the set screws on the small pulley, and adjust the pulley until both distances are equal. Tighten the set screws.
3. To ensure proper tension, check for free rotation of the tension arm. Grease the provided fitting regularly. If properly lubricated, the tension arm will automatically keep proper tension.

Idler Bearing Replacement

1. Remove the belt.
2. Remove the idler bolt with a 15/16" impact socket.
3. Remove the idler pulley snap ring.
4. Press out the bearing using an arbor press.
5. To reassemble, reverse the procedure.

Pedestal Bearing Replacement

1. Remove the belt.
2. Remove the large pulley retainer ring and pulley. (For quick coupled models, remove the outer keeper ring and keeper balls.)
3. Remove the bearing retainer ring and dust cover.
4. Using an arbor press, press out the driver hub and bearing assembly from the pedestal bearing bore.
5. Remove the bearing snap ring from the shaft.
6. Using the arbor press, press the bearings and spacer from the shaft.
7. Install new bearings and reverse the procedure for reassembly.

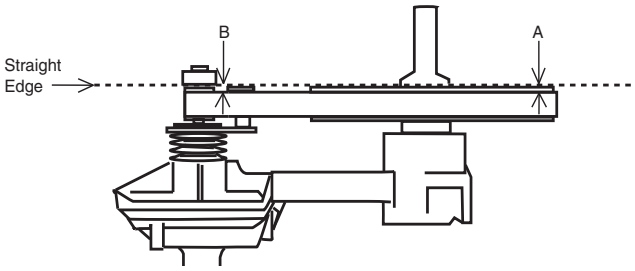

Figure 26

Troubleshooting

Symptom	Probable Cause(s)	Corrective Action(s)
Low Discharge	Pump not primed.	Remove topmost vent plug from face of pump and run pump to expel trapped air (See Installation Instructions).
	Air leaks in suction line.	Check and reseal inlet fittings.
	Blocked or clogged line strainer.	Inspect strainer and clear any debris from screen.
	Impeller plugged.	Inspect and clear obstruction.
	Undersize suction line or collapsed hose.	Suction line should be the same diameter as inlet port of pump or larger.
	Eye of impeller rubbing on volute.	Remove volute (front cover) and inspect the impeller. If wear detected, sand the impeller eye O.D. with emery cloth.

Performance Data for Cast Iron, Gear-Driven Models

ENGLISH STANDARD CHART

9006C-O 9016C-O

	20 PSI		30 PSI		40 PSI		50 PSI		60 PSI		70 PSI	
RPM	GPM	HP	GPM	HP	GPM	HP	GPM	HP	GPM	HP	GPM	HP
500	97	4.11	86	3.89	71	3.57	47	2.96				
540	106	5.15	96	4.78	87	4.63	70	4.22	47	3.51		
600	117	6.86	113	6.77	104	6.47	96	6.17	82	5.79	63	5.14

PERFORMANCE GRAPH

9006C-O and 9016C-O

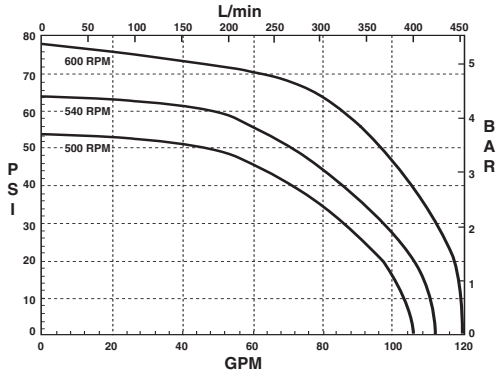

9008C-O 9018C-O 9028C-O

	20 PSI		30 PSI		40 PSI		50 PSI		60 PSI		70 PSI	
RPM	GPM	HP	GPM	HP	GPM	HP	GPM	HP	GPM	HP	GPM	HP
800	82	2.80	70	2.62	53	2.28						
900	96	4.05	88	3.80	76	3.60	60	3.21	24	2.12		
1000	110	5.57	102	5.42	96	5.21	86	5.00	70	4.42	46	3.57

9008C-O, 9018C-O and 9028C-O

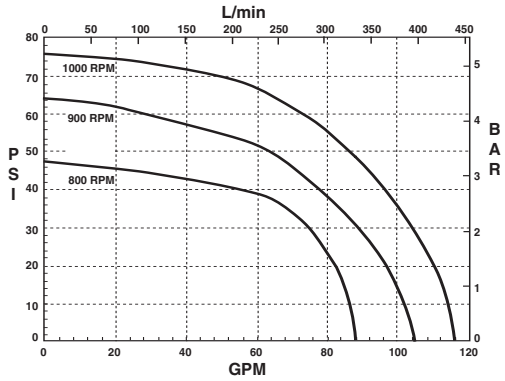

9006C-SP, 9016C-SP

	10 PSI	20 PSI	30 PSI	40 PSI	50 PSI	60 PSI	70 PSI
RPM	GPM	GPM	GPM	GPM	GPM	GPM	GPM
500	101	95	77	51	12		
540	111	109	94	74	47	25	
600	119	118	112	97	79	54	23

9006C-O-SP, 9016C-O-SP

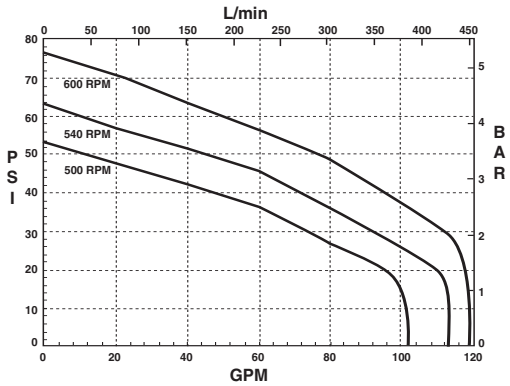

9008C-SP, 9018C-SP, 9028C-SP

	10 PSI	20 PSI	30 PSI	40 PSI	50 PSI	60 PSI
RPM	GPM	GPM	GPM	GPM	GPM	GPM
800	91	81	57	19		
940	103	101	84	60	25	
1000	115	114	104	87	65	33

9008C-O-SP, 9018C-O-SP, 9028C-O-SP

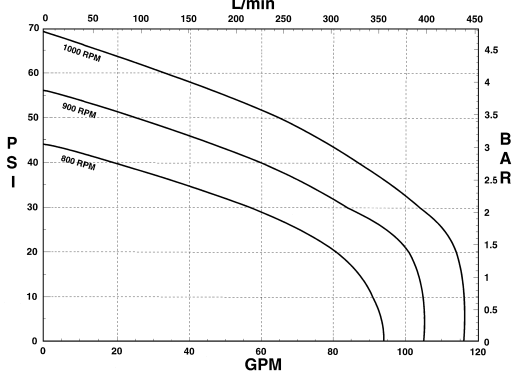

Performance Data for Cast Iron, Self-Priming Models

ENGLISH STANDARD CHART

9403C-1000-SP

RPM	GPM at 10 PSI	GPM at 20 PSI	GPM at 30 PSI	GPM at 40 PSI	GPM at 50 PSI	GPM at 60 PSI	GPM at 70 PSI	GPM at 80 PSI	GPM at 90 PSI
800	111	109	94	74	47	21			
900	120	119	116	102	85	62	32		
1000	121	121	120	119	110	97	78	54	24

9403C-540-SP

RPM	GPM at 10 PSI	GPM at 20 PSI	GPM at 30 PSI	GPM at 40 PSI	GPM at 50 PSI	GPM at 60 PSI	GPM at 70 PSI	GPM at 80 PSI	GPM at 90 PSI
500	114	113	101	83	60	27			
540	120	119	116	102	85	62	32		
600	121	121	120	119	110	97	78	54	24

Model 9402C

	RPM	GPM at 20 PSI	GPM at 30 PSI	GPM at 40 PSI	GPM at 50 PSI	GPM at 60 PSI	GPM at 70 PSI	GPM at 80 PSI	GPM at 90 PSI
9402C-1000	800	66	61	51	24				
	900	74	73	67	60	51	23		
	1000	76	76	76	75	68	62	52	22
9402C-540	450	61	54	45	21				
	500	67	64	60	51	25			
	540	71	71	68	63	54	25		
	600	76	76	75	74	70	63	53	23

Model 9403C & 9403S

	RPM	GPM at 20 PSI	GPM at 30 PSI	GPM at 40 PSI	GPM at 50 PSI	GPM at 60 PSI	GPM at 70 PSI	GPM at 80 PSI	GPM at 90 PSI	GPM at 100 PSI
9403C-1000	800	115	106	96	80	56				
	900	129	127	120	111	98	80	50		
	1000	140	139	137	133	128	119	100	76	46
9403C-540	450	107	99	86	50					
	500	121	116	106	93	76	42			
	540	129	127	120	111	98	80	50		
	600	140	138	135	130	121	112	94	73	40

Model 9403P

	RPM	GPM at 20 PSI	GPM at 30 PSI	GPM at 40 PSI	GPM at 50 PSI	GPM at 60 PSI	GPM at 70 PSI	GPM at 80 PSI
9403P-540	450	68	60	46	20			
	500	74	70	60	48	22		
	540	82	78	70	60	46		
	600	86	86	79	72	64	58	38

	RPM	GPM at 20 PSI	GPM at 30 PSI	GPM at 40 PSI	GPM at 50 PSI	GPM at 60 PSI	GPM at 70 PSI	GPM at 80 PSI
9403P-1000	800	73	66	58	42			
	900	82	78	70	60	46		
	1000	86	86	79	72	64	58	38

PERFORMANCE GRAPH

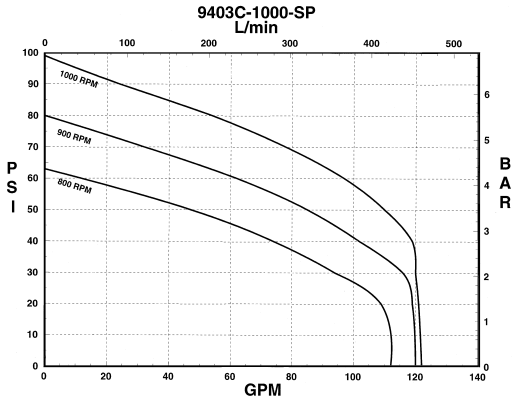

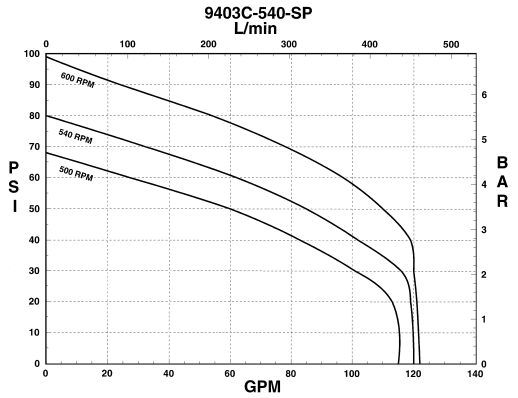

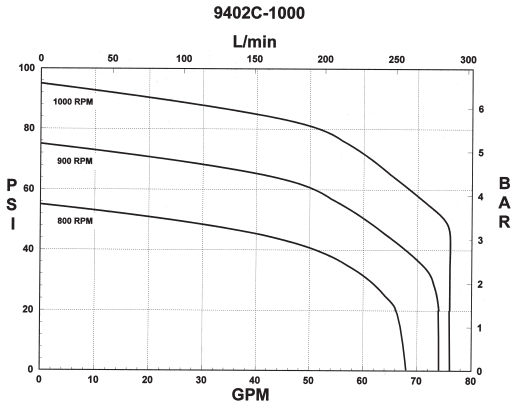

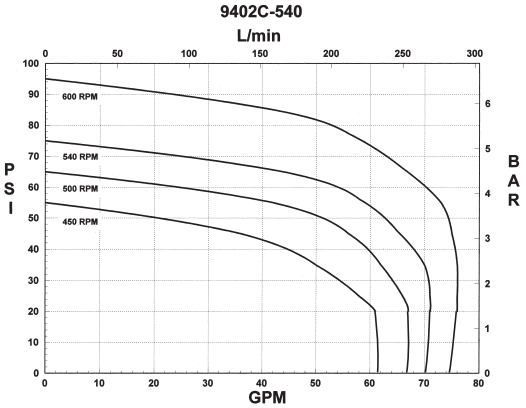

Performance Data for Cast Iron, Poly, and Stainless Steel Belt-Driven Models

ENGLISH STANDARD CHARTS AND GRAPHS

PERFORMANCE GRAPH

9403P-1000

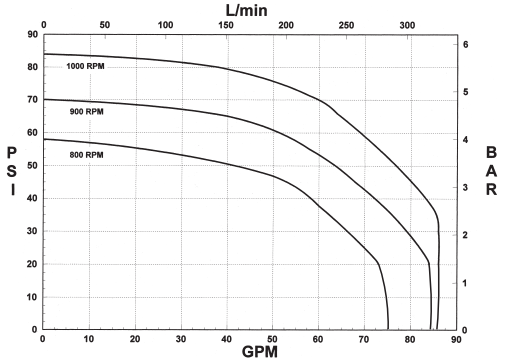

9403C-1000 and 9403S-1000

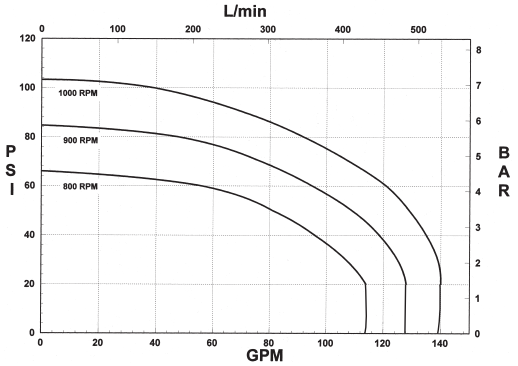

9403P-540

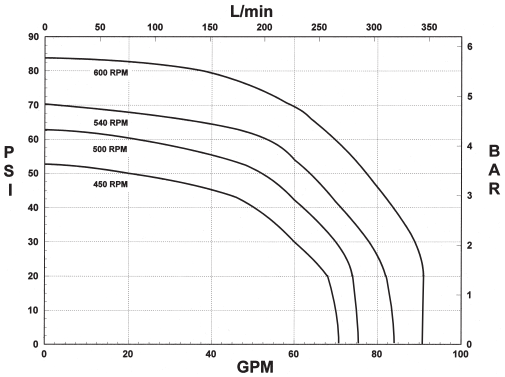

9403C-540 and 9403S-540

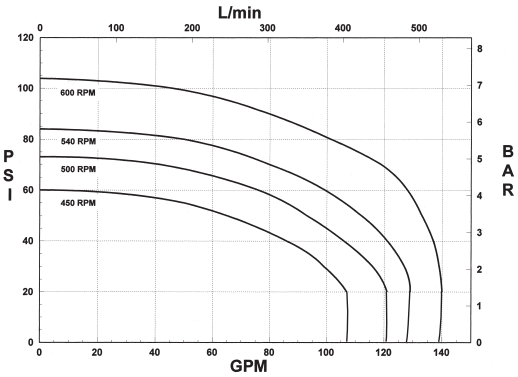

9006P-O 9016P-O	15 PSI		20 PSI		30 PSI		40 PSI		50 PSI		60 PSI		70 PSI	
RPM	GPM	HP	GPM	HP	GPM	HP	GPM	HP	GPM	HP	GPM	HP	GPM	HP
450	69.1	2.9	63.2	2.8	51.7	2.5	34.0	2.4						
500			77.0	3.9	67.3	3.7	55.0	3.3	37.4	2.8				
550			85.4	4.9	78.0	4.8	67.8	4.4	55.6	4.0	36.3	3.3		
600					93.4	6.5	85.3	6.3	76.1	5.9	65.7	5.6	52.1	4.9

9006P-O and 9016P-O

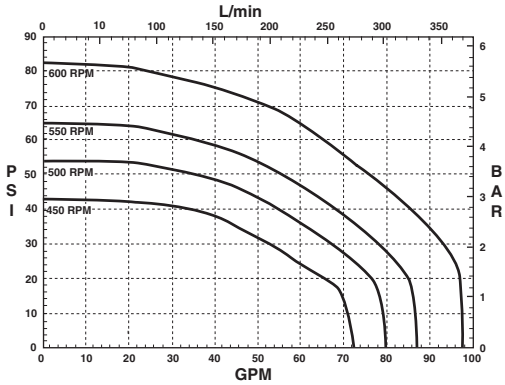

9008P-O 9018P-O	15 PSI		20 PSI		30 PSI		40 PSI		50 PSI		60 PSI	
RPM	GPM	HP	GPM	HP	GPM	HP	GPM	HP	GPM	HP	GPM	HP
800	69.7	3.3	64.2	3.2	52.8	3.0	33.7	2.5				
900			79.0	4.4	69.9	4.2	58.0	3.9	42.4	3.8		
1000					86.3	5.7	78.2	5.4	67.1	5.1	52.3	4.5

9008P-O and 9018P-O

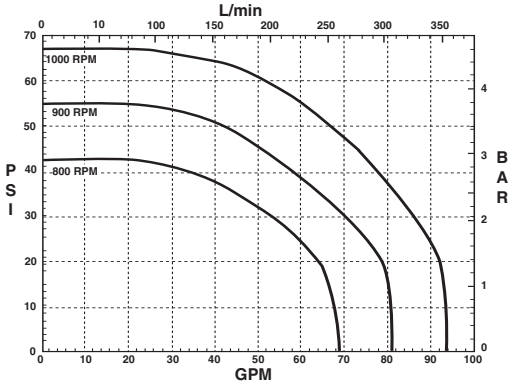

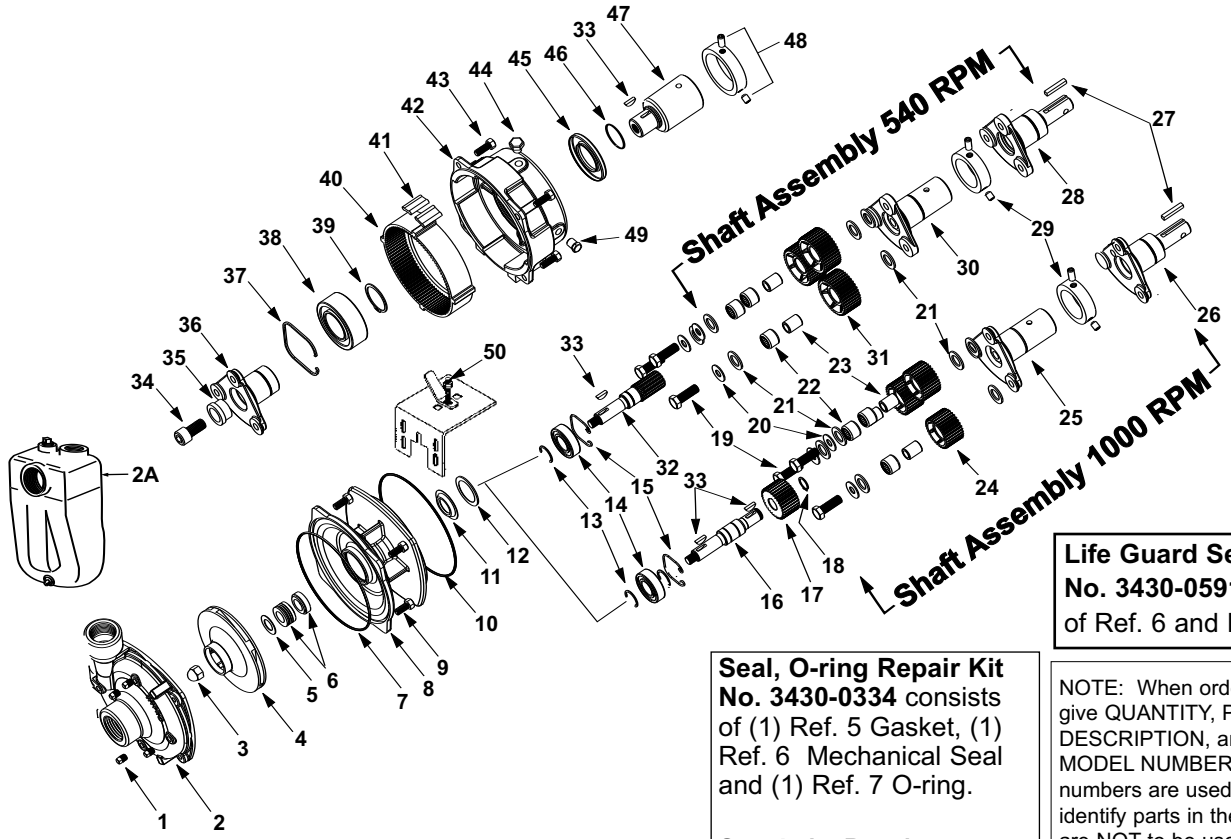

Life Guard Seal Kit No. 3430-0591 consists of Ref. 6 and Ref. 7.

Seal, O-ring Repair Kit No. 3430-0334 consists of (1) Ref. 5 Gasket, (1) Ref. 6 Mechanical Seal and (1) Ref. 7 O-ring.

Gear Lube Requirement: 6 oz. Phillube SAE 80W90 Oil

NOTE: When ordering parts, give QUANTITY, PART NUMBER, DESCRIPTION, and COMPLETE MODEL NUMBER. Reference numbers are used ONLY to identify parts in the drawing and are NOT to be used as order numbers.

Ref. No.	Qty. Req'd.	Part No.	Description
1	4	2406-0007	Drain Plug
2	1	0150-9000C	Pump Casing (w / SS wear ring)
2A	1	3430-0480SP	Pump Casing (Self-Priming Units)
3	1	2253-0001	Impeller Nut
4	1	0400-9000P	Impeller (Nylon)
5	1	1700-0101	Gasket
6	1	2120-0010	Mechanical Seal (Optional Buna-N)
6	1	2120-0011	Mechanical Seal (Standard Viton)
7	1	1720-0083	O-ring
8	1	0752-9000C	Mounting Flange Adapter
9	4	2210-0020	Hex Head Capscrew
10	1	1720-0139	O-ring
11	1	2130-0018	Bearing Lip Seal
12	1	1700-0098	Gasket
13	*	1810-0013	Retaining Ring — (1) required for 540 rpm, (2) for 1-3/8" and (3) for 1-3/4" 1000 rpm
14	1	2008-0001	Ball Bearing
15	1	1820-0025	Retaining Ring
15	3	2210-0046	Capscrew
16	1	0500-9002	Impeller Shaft (1000 rpm)
17	1	3900-0013	Sun Gear (1000 rpm)
18	1	1810-0011	Retaining Ring (1000 rpm)
19	3	2210-0046	Hex Head Capscrew
20	3	2270-0003	Washer
21	6	2265-0003	Thrust Washer
22	3	2007-0052	Bearing (included with driver gear)
23	3	2007-0022	Bearing Inner Race
24	3	3900-0040	Driver Gear w/Bearing (1000 rpm) 32 teeth, Dia. 2.13”

Ref. No.	Qty. Req'd.	Part No.	Description
25	1	0562-9002D	Driver Hub (Model 9008C-O)
26	1	0501-9018D	Driver Hub (Model 9018C-O)
27	1	1610-0005	Key
28	1	0501-9016D	Driver Hub (Model 9016C-O)
29	1	3435-0058	Locking Collar Kit (hollow shaft)
30	1	0562-9000D	Driver Hub (Model 9006C-O)
31	3	3900-0039	Driver Gear w/Bearing (540 rpm) 39 teeth, Dia. 2.6"
32	1	3900-0010	Impeller Shaft/Pinion Gear (540 rpm)
33	**	1610-0012	Woodruff Key **(1) req’d for 540 rpm, (2) req’d for 1000 rpm models.
34	1	2220-0035	Capscrew (Model 9028C)
35	1	2403-0012	Bushing (Model 9028C)
36	1	0501-9018D1	Driver Hub (Model 9028C)
37	1	1800-0014	Retaining Ring
38	1	2005-0002	Ball Bearing
39	1	1810-0001	Retaining Ring
40	1	3900-0009	Ring Gear
41	8	1450-0004	Cushion Bumper
42	1	0754-9000C	Gear Casing
43	4	2210-0026	Hex Head Capscrew
44	1	2404-0193	Breather Vent
45	1	2102-0025	Oil Seal
46	1	1720-0022	O-ring
47	1	0550-1322F4	Driver Hub (9028C) 1-3/4" Hub 20 Teeth
48	1	3430-0190	Locking Collar Kit (Model 9028C)
49	4	2406-0019	Oil Plug
50	1	1520-0034	Mounting Clip

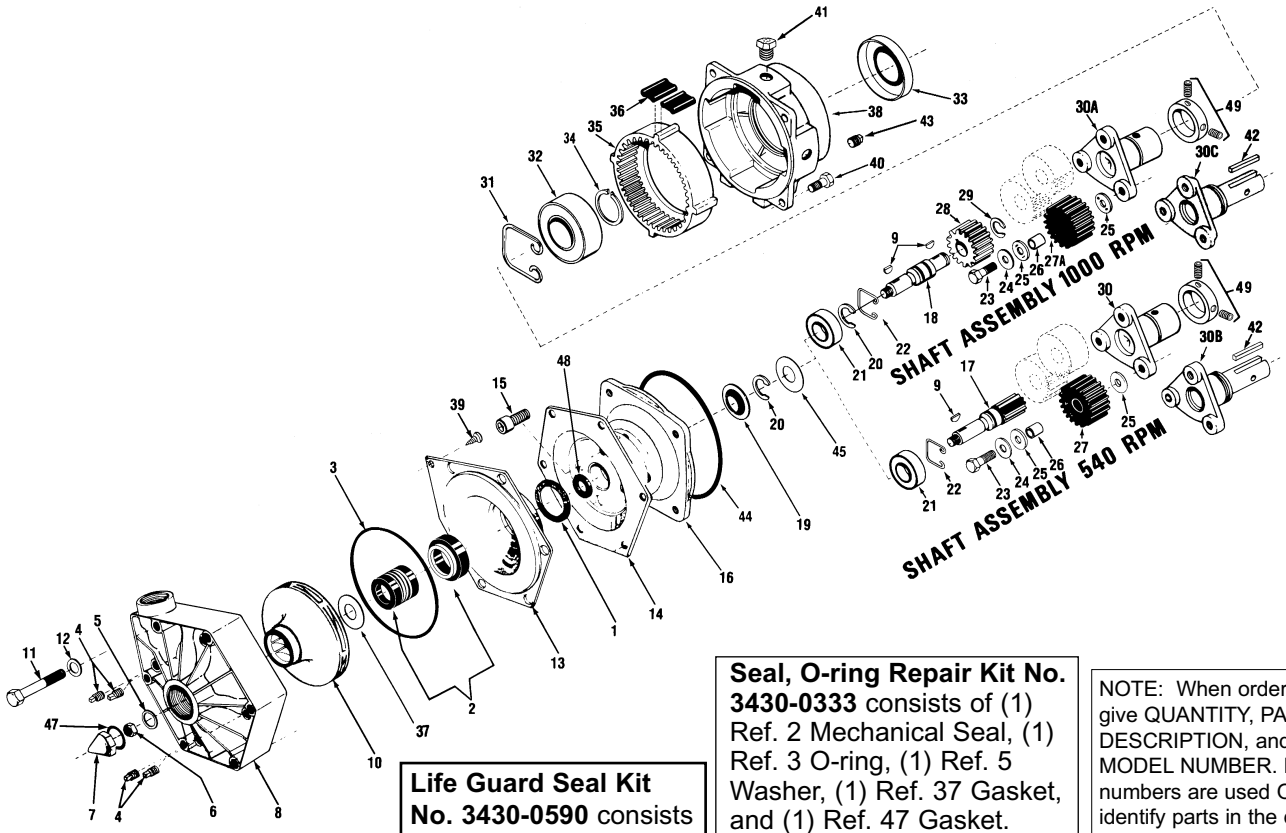

Life Guard Seal Kit No. 3430-0590 consists of Ref. Nos. 2, 3, 5 and 47.

Seal, O-ring Repair Kit No. 3430-0333 consists of (1) Ref. 2 Mechanical Seal, (1) Ref. 3 O-ring, (1) Ref. 5 Washer, (1) Ref. 37 Gasket, and (1) Ref. 47 Gasket.

Gear Lube Requirement:
6 oz. Phillube SAE 80W90 Oil

NOTE: When ordering parts, give QUANTITY, PART NUMBER, DESCRIPTION, and COMPLETE MODEL NUMBER. Reference numbers are used ONLY to identify parts in the drawing and are NOT to be used as order numbers.

Ref. No.	Qty. Req'd.	Part No.	Description
1	1	1410-0082	Spacer
2	1	2120-0011	Mechanical Seal
3	1	1721-0083	O-Ring
4	4	2406-0020	Plug
5	1	2270-0057	Washer
6	1	2250-0051	Jam Nut
7	1	2250-0052	Impeller Nut
8	1	0700-9000P	Pump Casing
9	**	1610-0042	Woodruff Key **(1) required for Model 9006P, (2) for Model 9008P
10	1	0403-9000P	Impeller (Polypropylene)
11	6	2210-0087	Capscrew
12	6	2270-0041	Washer
13	1	0750-9000P	Back Cover
14	1	0750-9006C	Flange
15	4	2220-0013	Capscrew
16	1	0752-9006C	Flange
17	1	0503-9000	Shaft (Model 9006P)
18	1	0504-9000	Shaft (Model 9008P)
19	1	2130-0018	Bearing Lip Seal
20	*	1810-0013	Retaining Ring *(1) required for 9006P (2) for 9008P
21	1	2008-0001	Ball Bearing
22	1	1820-0025	Retaining Ring
23	3	2210-0046	Capscrew
24	3	2270-0003	Washer
25	6	2265-0003	Thrustwasher

Ref. No.	Qty. Req'd.	Part No.	Description
26	3	2007-0022	Bearing Inner Race
27	3	3900-0039	Driver Gear (Model 9006P) w/ bearing 540
27A	3	3900-0040	Driver Gear (Model 9008P) w/ bearing 1000
28	1	3900-0013	Sun Gear (Model 9008P)
29	1	1810-0011	Retaining Ring (Model 9008P)
30	1	0562-9000D	Driver Hub (9006P) 1-3/8" PTO 540 rpm
30A	1	0562-9002D	Driver Hub (9008P) 1-3/8" PTO 1000 rpm
30B	1	0501-9016D	Shaft (Solid) 540 rpm
30C	1	0501-9018D	Shaft (Solid) 1000 rpm
31	1	1800-0014	Retaining Ring
32	1	2005-0002	Ball Bearing
33	1	2102-0025	Oil Seal
34	1	1810-0001	Retaining Ring
35	1	3900-0009	Ring Gear
36	8	1450-0004	Cushion Bumper
37	1	1700-0101	Gasket
38	1	0754-9000C	Gear Casing
39	1	2210-0088	Hex Head Screw
40	4	2210-0026	Capscrew
41	1	2404-0193	Breather Vent
43	4	2406-0019	Oil Plug
44	1	1720-0139	O-Ring
45	1	1700-0098	Gasket
47	1	1700-0097	Gasket
48	1	1410-0083	Slinger Ring
	1		Nameplate (not shown)
49	1	3435-0058	Locking Collar Kit (hollow shaft only)

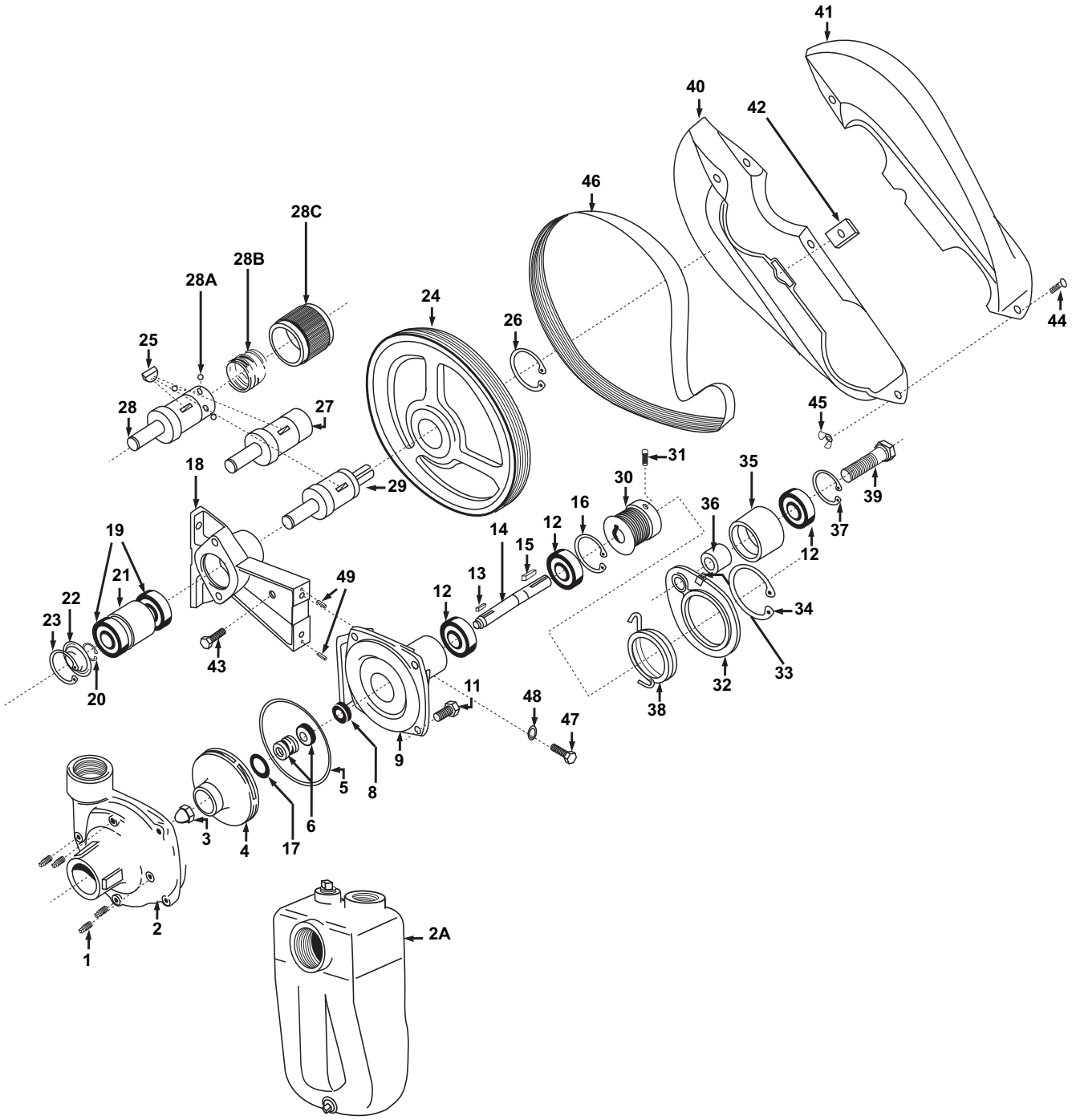
41
40
42
46
28C
28B
28A
24
26
44
25
28
27
45
31
35
18
29
30
39
16
36
37
19
14
12
15
12
21
49
13
34
22
12
23
43
33
32
20
11
48
38
47
9
5
8
6
3
4
17
2
2A
1

Ref. No.	Qty. Req'd	Part No.	Description
1	4	2406-0007	Drain Plug
2	1	0150-9000C	Pump Casing (Model 9403C)
2	1	0150-9000S1	Pump Casing (Model 9403S)
2	1	0150-9200C	Pump Casing (Model 9402C)
2A	1	3430-0480SP	Pump Casing (Model 9403C-SP) (The above casings include a stainless steel wear ring.)
3	1	2253-0002	Impeller Nut
3	1	2253-0006	Impeller Nut (Model 9403S)
4	1	0401-9100P	Impeller (Nylon) (standard)
4	1	0402-9100P	Impeller (Polypropylene) (9403S std.)
5	1	1720-0083	O-Ring
6	1	2120-0008	Mechanical Seal (optional Buna-N)
6	1	2120-0009	Mechanical Seal (standard Viton)
6	1	3430-0589	Mechanical Seal (opt. Silicon Carbide)
8	1	1410-0056	Slinger Ring
9	1	0750-9200C3	Mounting Flange
9	1	0756-9200S	Mounting Flange (Model 9403S)
10	1	6031-0252	Nameplate (Specify Model Number)
11	4	2210-0020	Bolt
11	4	2210-0125	Bolt (Model 9403S)
12	3	2000-0010	Ball Bearing
13	1	1610-0015	Key
14	1	0505-9200	Pump Shaft
15	1	1610-0004	Key
16	1	1820-0013	Bearing Retainer
17	1	1700-0100	Gasket
18	1	0703-9400D	Pedestal Bracket
19	2	2001-0006	Driver Shaft Bearings
20	1	1810-0012	Driver Shaft Bearing Retainer Ring
21	1	1410-0094	Bearing Spacer
22	1	2840-0053	End Cap (label)
23	1	1820-0032	Bearing Bore Retaining Ring
24	1	3115-0031	Driver Pulley (540 rpm)
24	1	3115-0032	Driver Pulley (1000 rpm)
24	1	3115-0033	Driver Pulley (1000 rpm, 1-3/4" shaft)
25	1	1610-0033	Key (Driver Pulley)
25	1	1610-0034	Key (Driver Pulley, 1-3/4" shaft)
26	1	1810-0031	Retaining Ring (Driver Pulley)
26	1	1810-0032	Retain. Ring (Dr. Pulley, 1-3/4" shaft)
27	1	0555-9400F	Shaft (540 rpm)(3430-0207 kit used on 0555-9400F and 0556-9400F shafts)
27	1	0556-9400F	Shaft (1000 rpm) (3430-0207 kit used on 0555-9400F and 0556-9400F shafts)
27	1	0557-9400F	Shaft (1-3/4" 1000 rpm) (3430-0190 kit used on 0557-9400F shaft)
28	1	0555-9400F1	Shaft (540 Quick Coupler)

Ref. No.	Qty. Req'd.	Part No.	Description
28A	3	3250-0004	Locking Ball
28B	1	1900-0115	Collar Spring
28C	1	1400-0021	Collar
29	1	0503-9400	Shaft (1" solid)
30	1	3115-0034	Driven Pulley (5/8" dia. bore)
31	2	2230-0003	Set Screw for Driven Pulley
32	1	0706-9400C	Idler Bracket (Cast Iron Pumps)
33	1	2405-0003	Grease Zerk Fitting
34	1	1810-0036	Retaining Ring (Idler Bracket, Cast Iron)
35	1	3115-0036	Idler Pulley
36	1	1410-0095	Spacer (Idler Pulley)
37	1	1820-0013	Retaining Ring (Idler Pulley)
38	1	1900-0156	Torsion Spring (Idler for Cast Iron)
39	1	2210-0111	Idler Bolt/Shaft
40	1	2840-0075	Belt Shield
41	1	2840-0076	Belt Shield
42	1	1520-0062	Bracket for Belt Shield
43	1	2210-0021	Attachment Bolt for Shield
44	4	2240-0017	Assembly Bolts for Shield
45	4	2252-0002	Assembly Nuts for Shield
46	1	3100-0006	Poly V-Belt (540 rpm)
46	1	3100-0005	Poly V-Belt (1000 rpm)
47	2	2210-0055	Bolts for Pump to Bracket
48	2	2260-0006	Lock Washers for Bracket Bolts
49	2	1600-0070	Roll Pin

NOTE: When ordering parts, give QUANTITY, PART NUMBER, DESCRIPTION, and COMPLETE MODEL NUMBER. Reference numbers are used ONLY to identify parts in the drawing and are NOT to be used as order numbers.

Repair Kit No. 3430-0476 (for 540 rpm drives) consists of (1) Ref. 46 Poly V-Belt, (1) Ref. 5 O-ring, (1) Ref. 6 Mechanical Seal (Viton) and (1) Ref. 17 Gasket.

Repair Kit No. 3430-0477 (for 1000 rpm drives) consists of (1) Ref. 46 Poly V-Belt, (1) Ref. 5 O-ring, (1) Ref. 6 Mechanical Seal (Viton) and (1) Ref. 17 Gasket.

Seal Repair Kit No. 3430-0332 consists of (1) Ref. 6 Mechanical Seal (Viton-Std.), (1) Ref. 5 O-ring and (1) Ref. 17 Gasket.

Life Guard Seal Repair Kit No. 3430-0589 consists of (1) Ref. 6 Mechanical Seal (Silicon Carbide-optional) and (1) Ref. 5 O-ring.

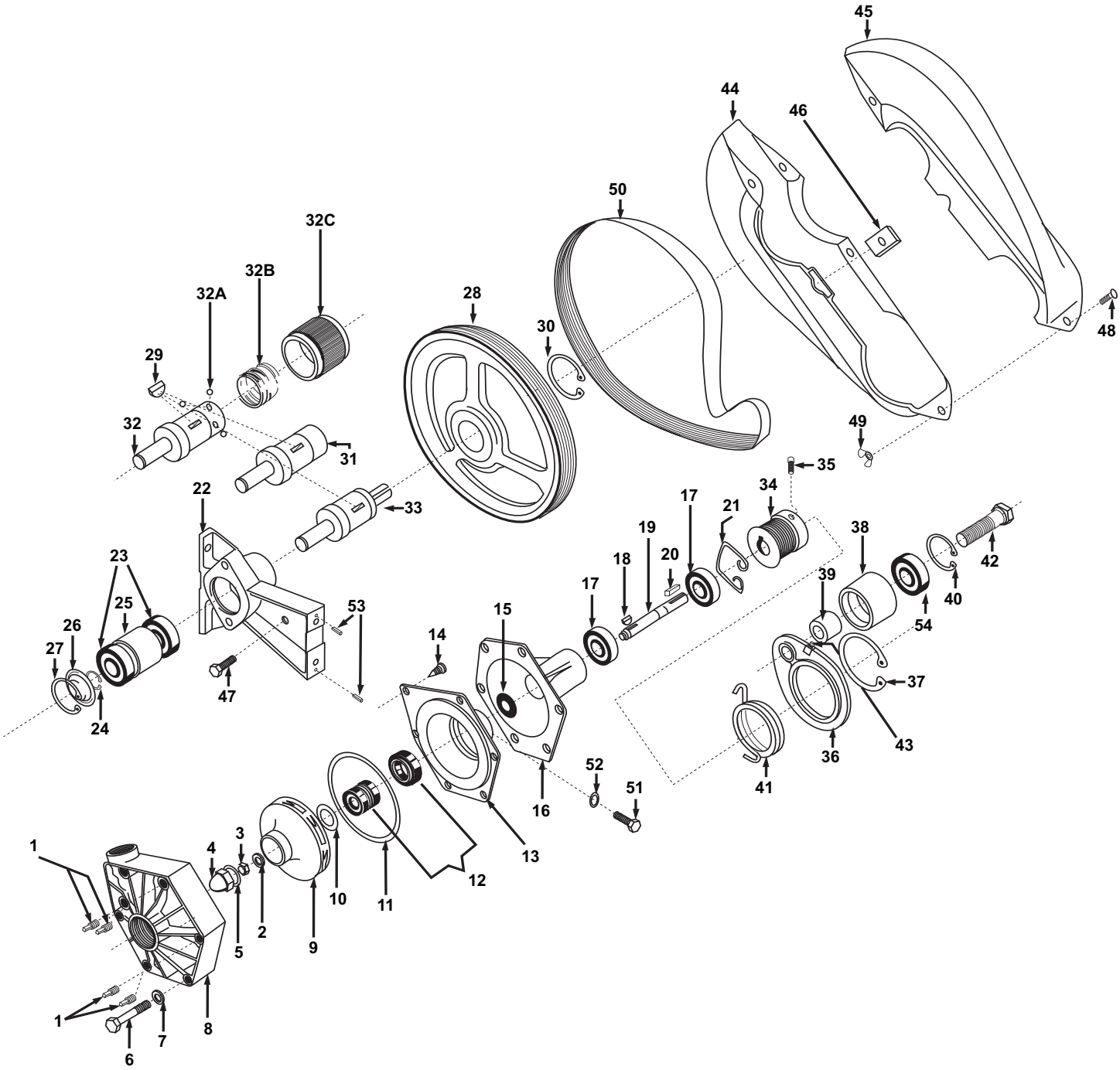
45
44
46
50
32C
32B
32A
28
30
48
29
32
31
49
35
22
33
34
17
21
19
38
23
18
20
42
25
17
39
40
26
53
15
54
27
14
47
37
24
43
36
52
41
51
16
13
1
4
3
12
10
11
2
5
9
1
8
7
6

Ref. No.	Qty. Req'd.	Part No.	Description
1	4	2406-0020	Plug
2	1	2270-0057	Washer
3	1	2250-0051	Jam Nut
4	1	2250-0052	Impeller Nut
5	1	1700-0097	Gasket
6	6	2210-0087	Screw
7	6	2270-0041	Washer
8	1	0700-9000P	Pump Casing
9	1	0403-9000P	Impeller (Polypropylene)
10	1	1700-0101	Gasket
	1		Nameplate (not shown)
11	1	1721-0083	O-Ring
12	1	2120-0011	Mechanical Seal
13	1	0750-9000P	Back Cover
14	1	2210-0088	Screw
15	1	1410-0083	Slinger Ring
16	1	0702-9200C	Flange
17	2	2008-0001	Bearing
18	1	1610-0042	Woodruff Key (ss)
19	1	0507-9200	Stainless Steel Shaft (316 ss)
20	1	1610-0004	Key
21	1	1820-0025	Retaining Ring
22	1	0703-9400D	Pedestal Bracket
23	2	2001-0006	Driver Shaft Bearings
24	1	1810-0012	Driver Shaft Bearing Retainer Ring
25	1	1410-0094	Bearing Spacer
26	1	2840-0053	End Cap (label)
27	1	1820-0032	Bearing Bore Retaining Ring
28	1	3115-0031	Driver Pulley (540 rpm)
28	1	3115-0032	Driver Pulley (1000 rpm)
28	1	3115-0033	Driver Pulley (1000 rpm, 1-3/4" shaft)
29	1	1610-0033	Key (Driver Pulley)
29	1	1610-0034	Key (Driver Pulley, 1-3/4" shaft)
30	1	1810-0031	Retaining Ring (Driver Pulley)
30	1	1810-0032	Retain. Ring (Dr. Pulley, 1-3/4" shaft)

Ref. No.	Qty. Req'd.	Part No.	Description
31	1	0555-9400F	Shaft (540 rpm) (3430-0207 kit used on 0555-9400F and 0556-9400F shafts)
31	1	0556-9400F	Shaft (1000 rpm) (3430-0207 kit used on 0555-9400F and 0556-9400F shafts)
31	1	0557-9400F	Shaft (1-3/4" 1000 rpm) (3430-0190 kit used on 0557-9400F shaft)
32	1	0555-9400F1	Shaft (540 Quick Coupler)
32A	3	3250-0004	Locking Ball
32B	1	1900-0115	Collar Spring
32C	1	1400-0021	Locking Collar
33	1	0503-9400	Shaft (1" solid)
34	1	3115-0035	Driven Pulley (7/8" dia. bore)
35	2	2230-0003	Set Screw for Driven Pulley
36	1	0707-9400C	Idler Bracket (Poly Pumps)
37	1	1810-0035	Retaining Ring (Idler Bracket, Poly)
38	1	3115-0036	Idler Pulley
39	1	1410-0095	Spacer (Idler Pulley)
40	1	1820-0013	Retaining Ring (Idler Pulley)
41	1	1900-0157	Torsion Spring (Idler for Poly)
42	1	2210-0111	Idler Bolt/Shaft
43	1	2405-0003	Grease Fitting for Idler Arm
44	1	2840-0075	Belt Shield
45	1	2840-0076	Belt Shield
46	1	1520-0062	Bracket for Belt Shield
47	1	2210-0021	Attachment Bolt for Shield
48	4	2240-0017	Assembly Bolts for Shield
49	4	2252-0002	Assembly Nuts for Shield
50	1	3100-0006	Poly V-Belt (540 rpm)
50	1	3100-0005	Poly V-Belt (1000 rpm)
51	2	2210-0055	Bolts for Pump to Bracket
52	2	2260-0006	Lock Washers for Bracket Bolts
53	2	1600-0070	Roll Pin
54	1	2000-0010	Bearing

NOTE: When ordering parts, give QUANTITY, PART NUMBER, DESCRIPTION, and COMPLETE MODEL NUMBER. Reference numbers are used ONLY to identify parts in the drawing and are NOT to be used as order numbers.

Life Guard Seal Kit 3430-0590 consists of Ref. Nos. 2, 5, 11, 12.

Repair Kit No. 3430-0478 (for 540 rpm drives) consists of (1) Ref. 50 Poly V-Belt, (1) Ref. 11 O-ring, (1) Ref. 12 Mechanical Seal, (1) Ref. 5 Gasket and (1) Ref. 10 Gasket.

Repair Kit No. 3430-0479 (for 1000 rpm drives) consists of (1) Ref. 50 Poly V-Belt, (1) Ref. 11 O-ring, (1) Ref. 12 Mechanical Seal, (1) Ref. 5 Gasket and (1) Ref. 10 Gasket.

Seal, O-ring Repair Kit No. 3430-0333 consists of (1) Ref. 12 Mechanical Seal, (1) Ref. 11 O-ring, (1) Ref. 10 Gasket, (1) Ref. 5 Gasket and (1) Ref. 2 Washer.

Limited Warranty on Hypro/SHURflo Agricultural Pumps & Accessories

Hypro/SHURflo (hereafter, "Hypro") agricultural products are warranted to be free of defects in material and workmanship under normal use for the time periods listed below, with proof of purchase.

- Pumps: one (1) year from the date of manufacture, or one (1) year of use. This limited warranty will not exceed two (2) years, in any event.
- Accessories: ninety (90) days of use.

This limited warranty will not apply to products that were improperly installed, misapplied, damaged, altered, or incompatible with fluids or components not manufactured by Hypro. All warranty considerations are governed by Hypro's written return policy.

Hypro's obligation under this limited warranty policy is limited to the repair or replacement of the product. All returns will be tested per Hypro's factory criteria. Products found not defective (under the terms of this limited warranty) are subject to charges paid by the returnee for the testing and packaging of "tested good" non-warranty returns.

No credit or labor allowances will be given for products returned as defective. Warranty replacement will be shipped on a freight allowed basis. Hypro reserves the right to choose the method of transportation.

This limited warranty is in lieu of all other warranties, expressed or implied, and no other person is authorized to give any other warranty or assume obligation or liability on Hypro's behalf. Hypro shall not be liable for any labor, damage or other expense, nor shall Hypro be liable for any indirect, incidental or consequential damages of any kind incurred by the reason of the use or sale of any defective product. This limited warranty covers agricultural products distributed within the United States of America. Other world market areas should consult with the actual distributor for any deviation from this document.

Return Procedures

All products must be flushed of any chemical (ref. OSHA section 1910.1200 (d) (e) (f) (g) (h)) and hazardous chemicals must be labeled/tagged before being shipped* to Hypro for service or warranty consideration. Hypro reserves the right to request a Material Safety Data Sheet from the returnee for any pump/product it deems necessary. Hypro reserves the right to "disposition as scrap" products returned which contain unknown fluids. Hypro reserves the right to charge the returnee for any and all costs incurred for chemical testing, and proper disposal of components containing unknown fluids. Hypro requests this in order to protect the environment and personnel from the hazards of handling unknown fluids.

Be prepared to give Hypro full details of the problem, including the model number, date of purchase, and from whom you purchased your product. Hypro may request additional information, and may require a sketch to illustrate the problem.

Contact Hypro Service Department at 800-468-3428 to receive a Return Merchandise Authorization number (RMA#). Returns are to be shipped with the RMA number clearly marked on the outside of the package. Hypro shall not be liable for freight damage incurred during shipping. Please package all returns carefully. All products returned for warranty work should be sent **shipping charges prepaid** to:

HYPRO
Attention: Service Department
375 Fifth Avenue NW
New Brighton, MN 55112

For technical or application assistance, call the **Hypro Technical/Application number: 800-445-8360**. To obtain service or warranty assistance, call the **Hypro Service and Warranty number**: **800-468-3428**; or send a fax to the **Hypro Service and Warranty FAX**: **651-766-6618**.

*Carriers, including U.S.P.S., airlines, UPS, ground freight, etc., require specific identification of any hazardous material being shipped. Failure to do so may result in a substantial fine and/or prison term. Check with your shipping company for specific instructions.

Pentair
SPRAY & INJECTION TECHNOLOGIES GROUP
375 Fifth Avenue NW • New Brighton, MN 55112
Phone: (651) 766-6300 • 800-424-9776 • Fax: 800-323-6496
www.hypropumps.com

2010 Hypro
Printed in USA